A	B	C	D	E	F	G	H	I	J	K	L
79,5	**111,8**	**18,8**	**36**	**17,6**	**21**	**22,5**	**31,6**	**30**	**39**	**79,8**	**44,7**

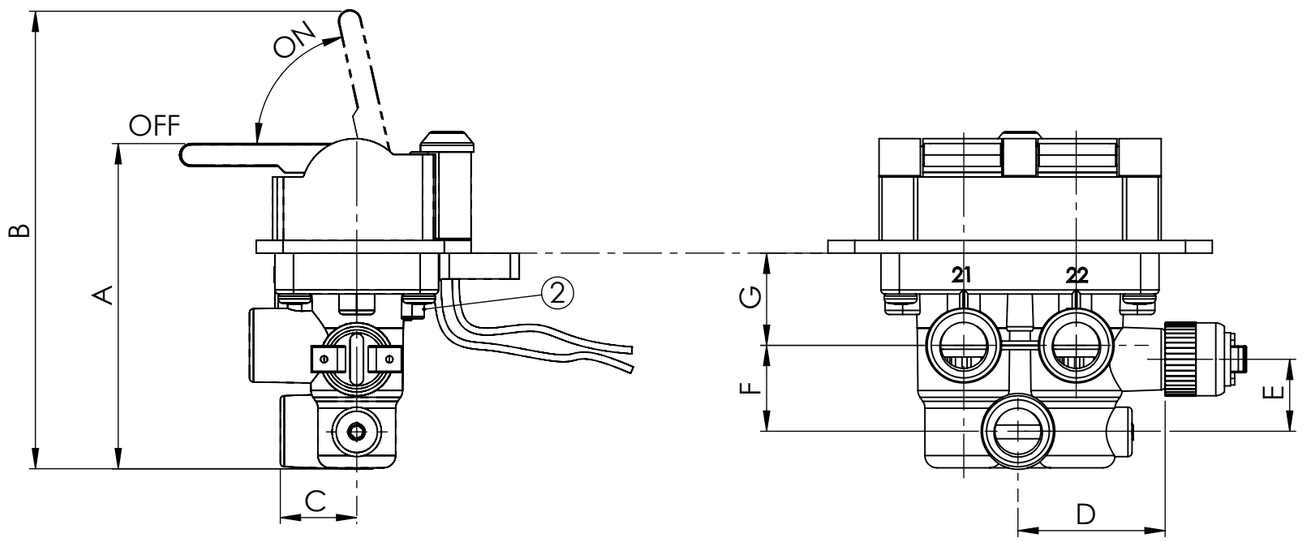

1 - Supply
21 / 22 - Delivery
2 - Exhaust

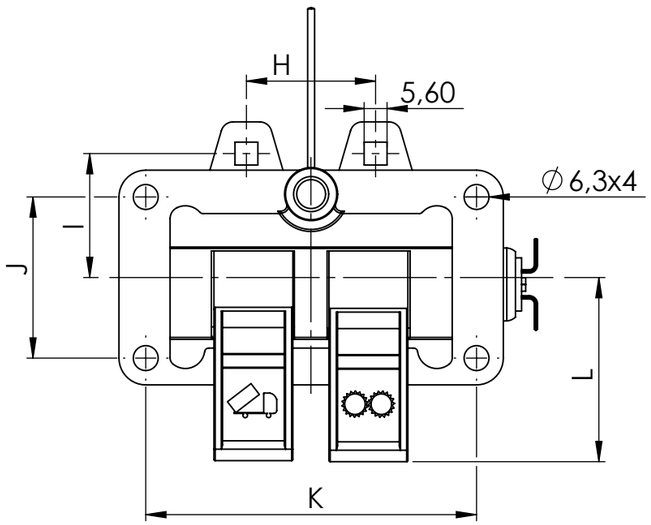

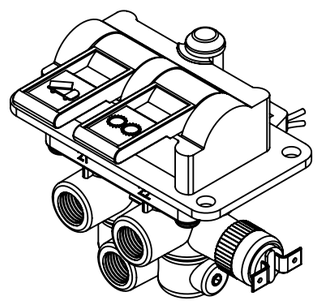

1:2

Main Data	
Working medium	**Air**
Operating pressure (Bar)	**up to 12**
Working temperature	**-40˚C / +80˚C**
Nominal diameter (mm)	**3**
Thread Ports	**G1/4"**

Copyrigt WABDEX®

WABDEX® ORIGINAL

Date	Signature			
Drawn				
2025-5-14	**Ahmet**			
Checked				
2025-5-14	**Furkan**			
Expert		Material No.	Shett	Scale	Size
Furkan			**1/1**	**1:2**	**A3**
CAD System	Revision		Language	Mass	
SOLIDWORKS			EN	**0.204** KG	