A	B	C	D	E	F	G	H	I	J	K
79,8	**113,8**	**21,7**	**20,3**	**16,5**	**20**	**22,3**	**40**	**40,5**	**42,8**	**52,6**

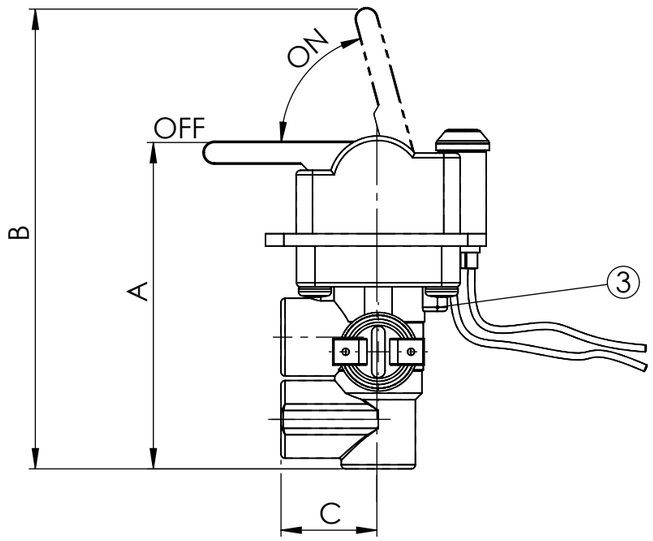

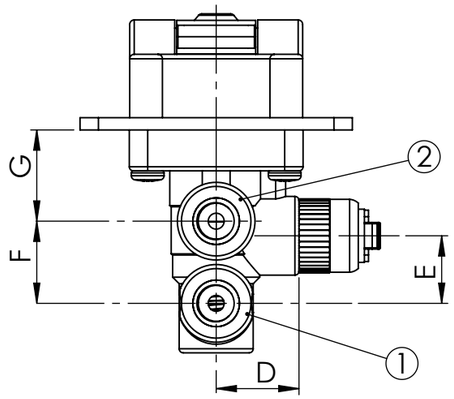

1 - Supply
2 - Delivery
3 - Exhaust

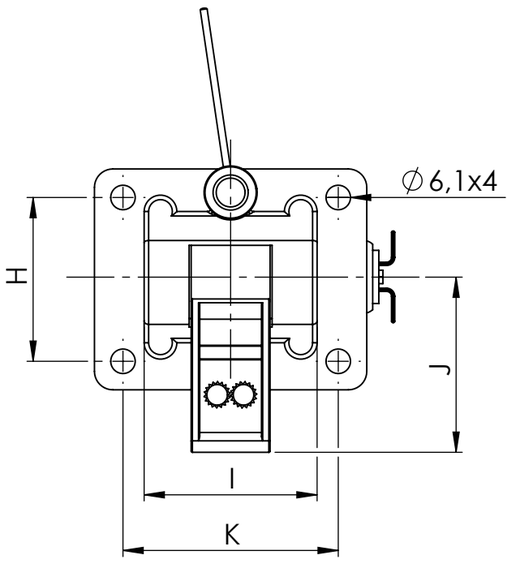

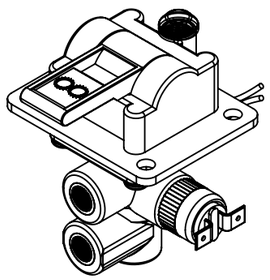

Main Data	
Working medium	**Air**
Operating pressure (Bar)	**up to 12**
Working temperature	**-40˚C / +80˚C**
Nominal diameter (mm)	**3**
Thread Ports	**G1/8"**

1:2

Copyrigt WABDEX®		WABDEX® ORIGINAL		
Date	Signature			
Drawn				
2025-5-14	**Ahmet**			
Checked				
2025-5-14	**Furkan**			
Expert		Material No.	Shett	Scale	Size
Furkan			**1/1**	**1:2**	**A3**
CAD System	Revision		Language	Mass	
SOLIDWORKS			EN	**0.204** KG	